COMPONENT HARDWARE®

1890 Swarthmore Avenue, PO Box 2020, Lakewood, NJ 08701
Phone: 800-526-3694, 732-363-4700, Fax: 732-364-8110
www.componenthardware.com

PROJECT NAME: _____

LOCATION: _____

SPECIFIER ITEM NO. _____ **QTY:** _____

COMPONENT HARDWARE PART NO. _____

Component Hardware® Regal Ride™ Caster Pack, Medium Duty Swivel Plate with 5” (127mm) Black Polyolefin Wheel

CSTPK-5PSP

CMP1-5BBN 5” Brake Caster, 2 ea
CMP1-5BPN 5” Non-Brake Caster, 2 ea



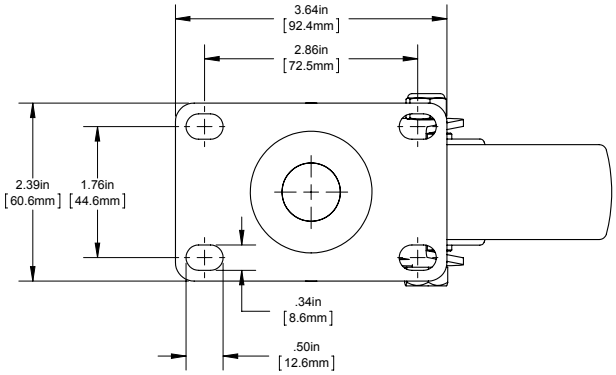

Dimensions shown in inches (mm) are for reference only and are subject to change.

Shipping weight - 8 lbs

Caster Pack, Medium Duty, Swivel Plate, 5” Black Polyolefin Wheels

Medium Duty Construction

- 250 lbs (110 kg) static load capacity
- 2 brake and 2 non-brake models included
- Full 1-1/4” (32mm) tread width
- 2-3/8” x 3-5/8” swivel plate
- Heavy 9-gauge mounting plate

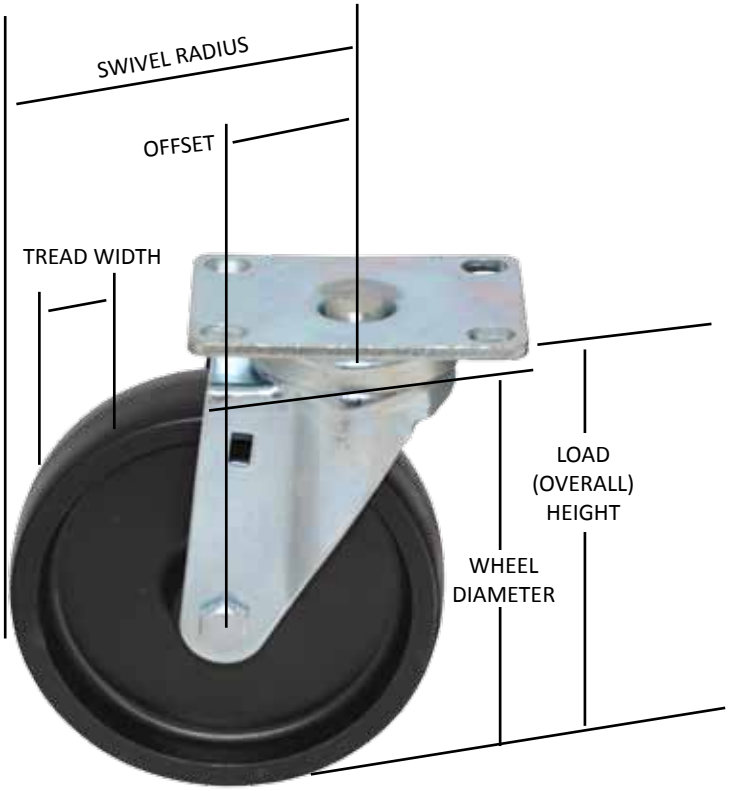

Load Height: 6” (152mm)
Wheel: 5” (127mm)
Swivel Radius: 4” (102mm)
Material: Zinc Plated Steel

NSF® COMPONENT